OLAF

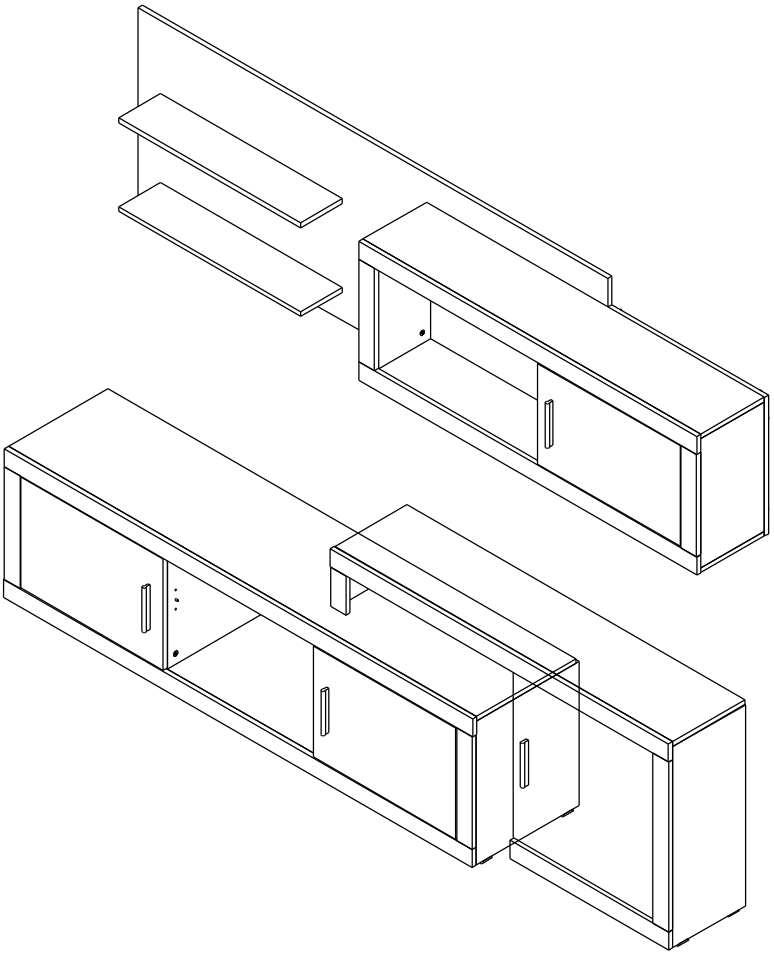

A 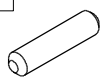 42	B 18	C 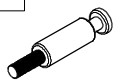 42	D 42	E 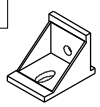 44	F 12
G 8	H 3,5x16 20	J 4x16 104	K 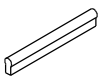 4	L 8	M 4
N 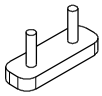 12	P 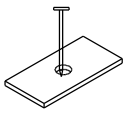 4	R 2			

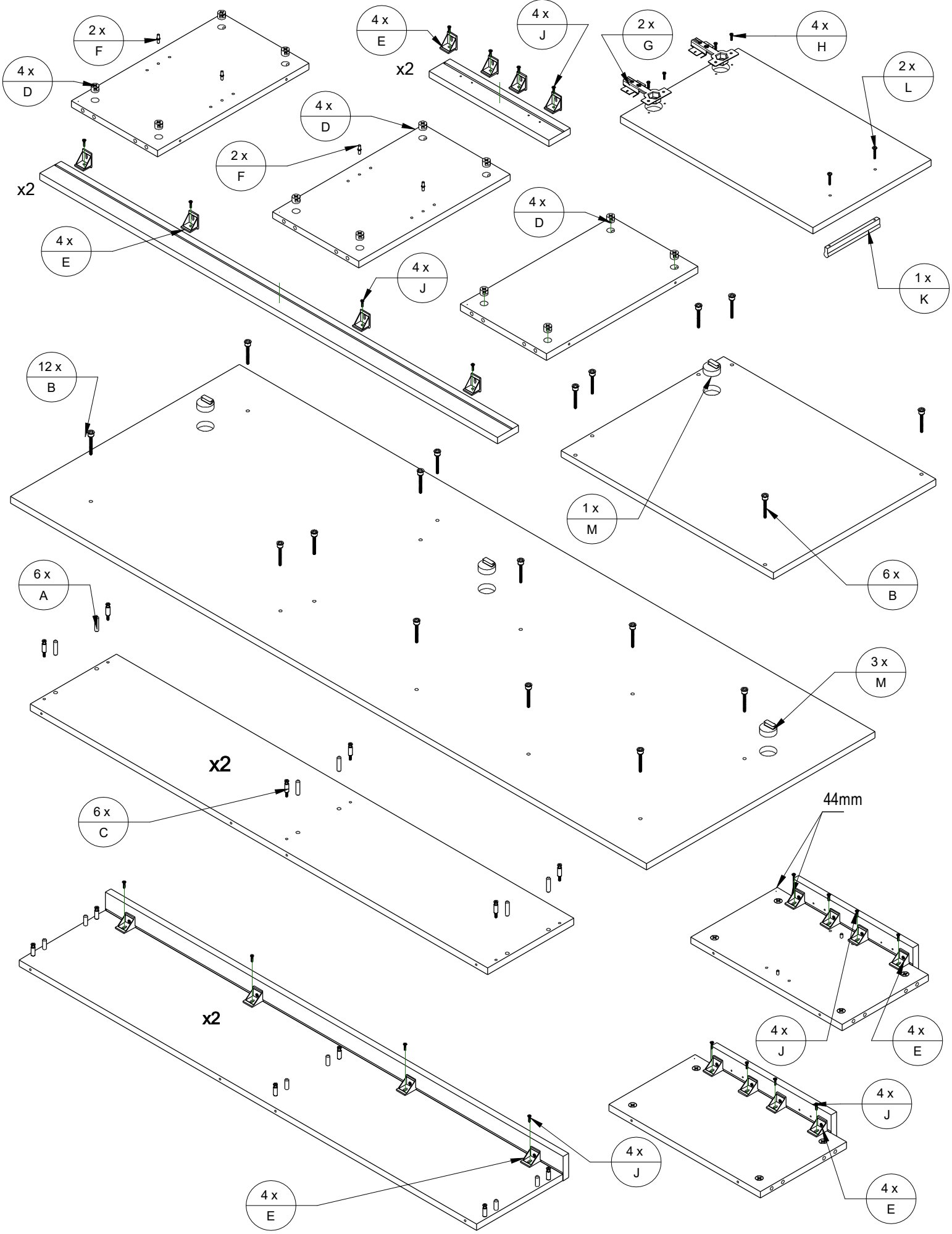
2 x
F
4 x
D
4 x
E
x2
4 x
J
2 x
G
4 x
H
2 x
L
4 x
D
2 x
F
x2
4 x
E
4 x
D
4 x
J
1 x
K
12 x
B
1 x
M
6 x
B
6 x
A
3 x
M
x2
6 x
C
44mm
x2
4 x
J
4 x
E
4 x
J
4 x
J
4 x
E
4 x
E

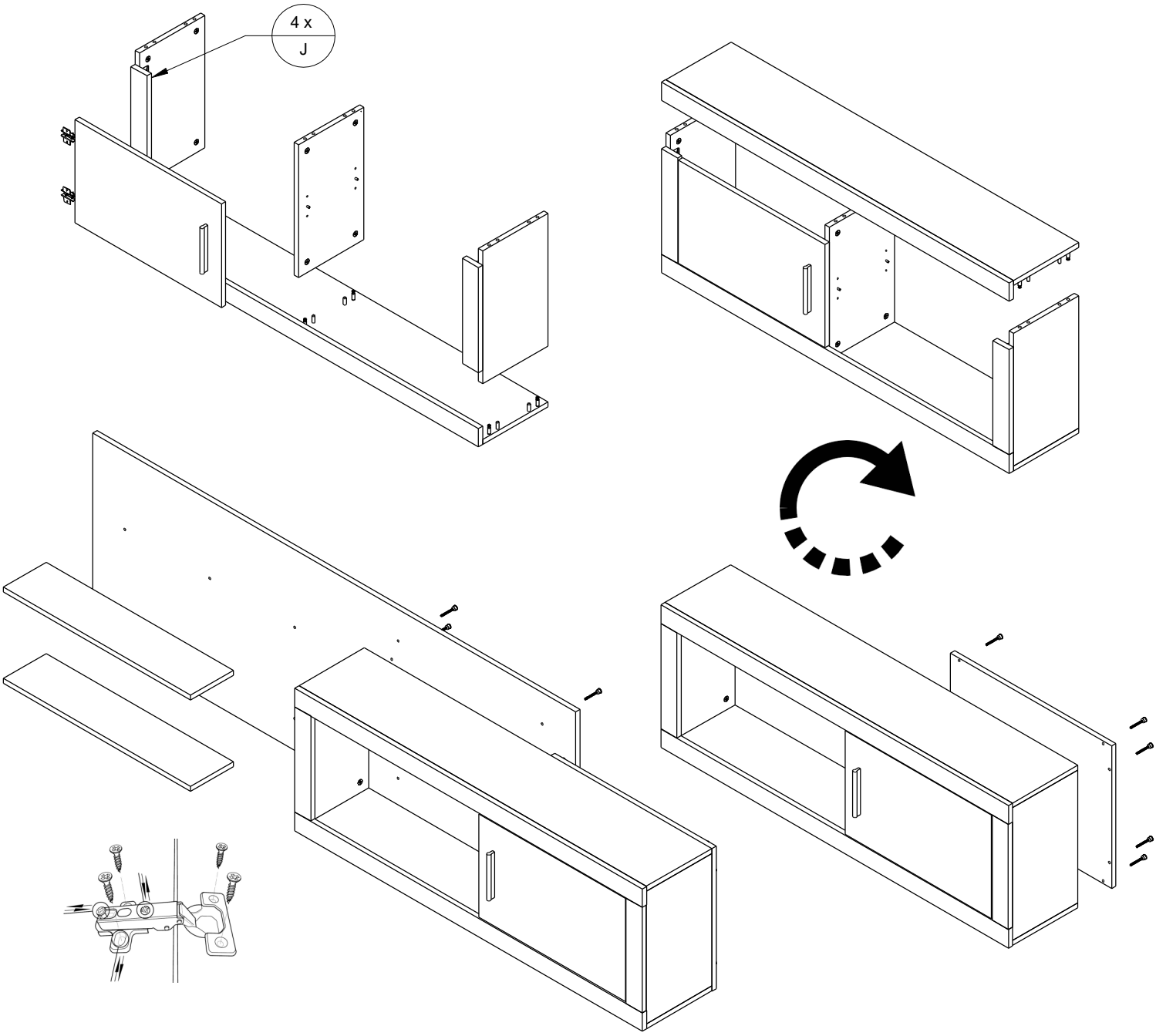
4 x
J

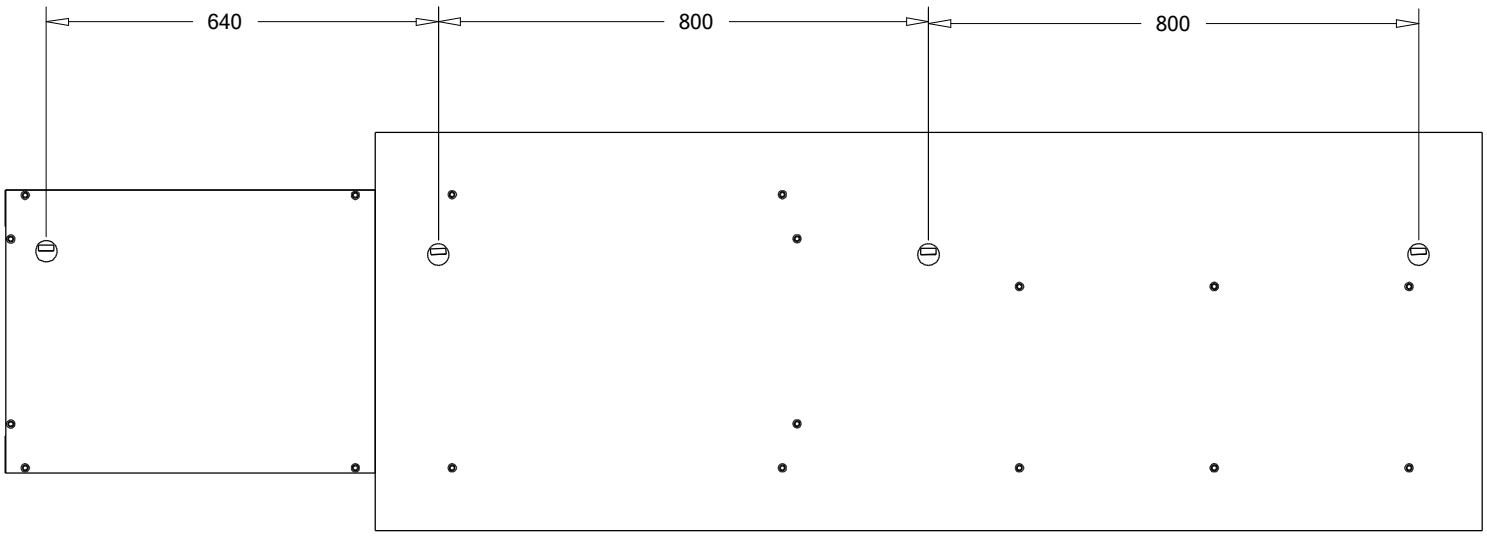
640
800
800

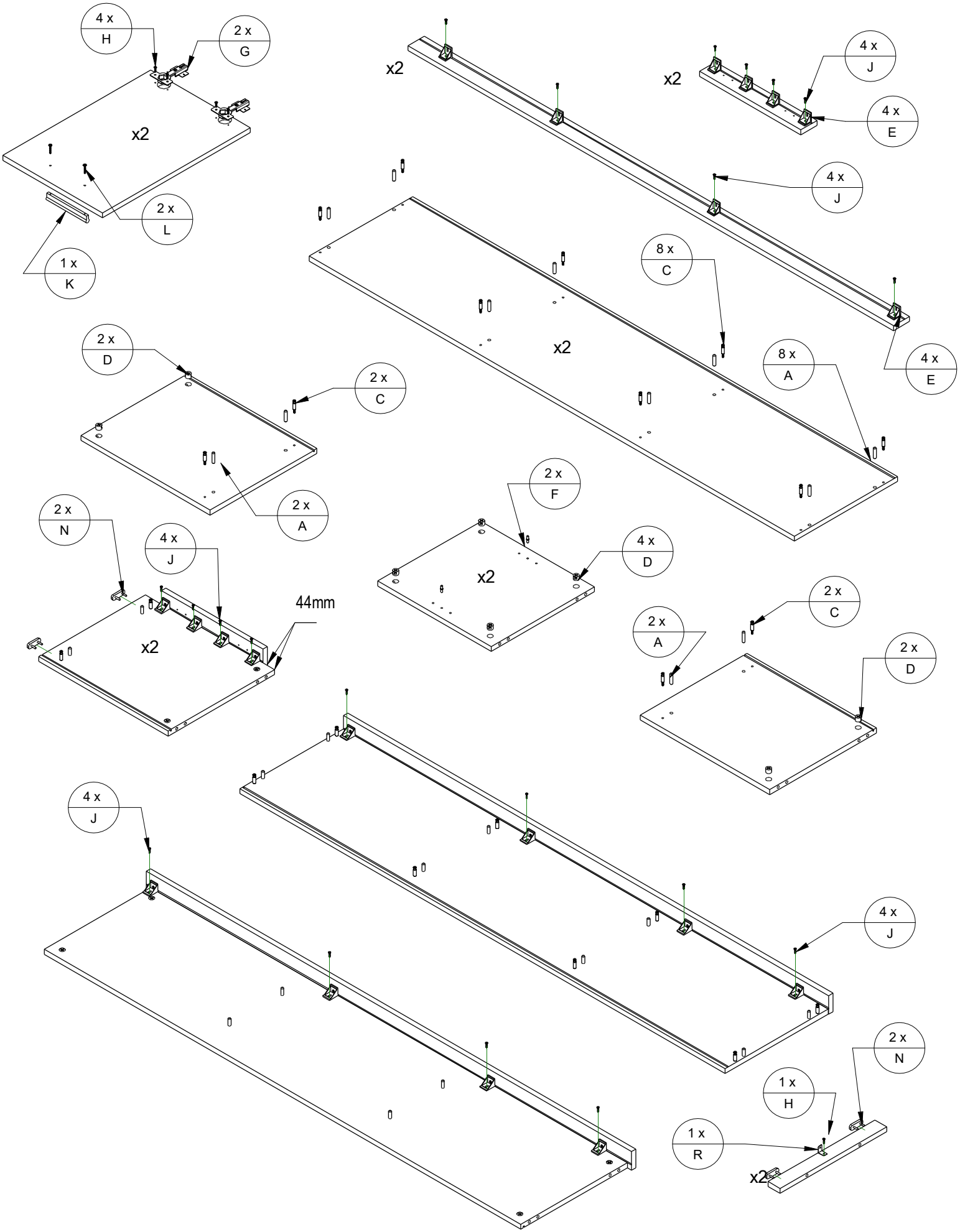
4 x H
2 x G
x2
2 x L
1 x K
x2
x2
4 x J
4 x E
4 x J
8 x C
x2
8 x A
4 x E
2 x D
2 x C
2 x A
2 x F
4 x D
x2
2 x N
4 x J
44mm
x2
2 x C
2 x A
2 x D
4 x J
4 x J
2 x N
1 x H
1 x R
x2

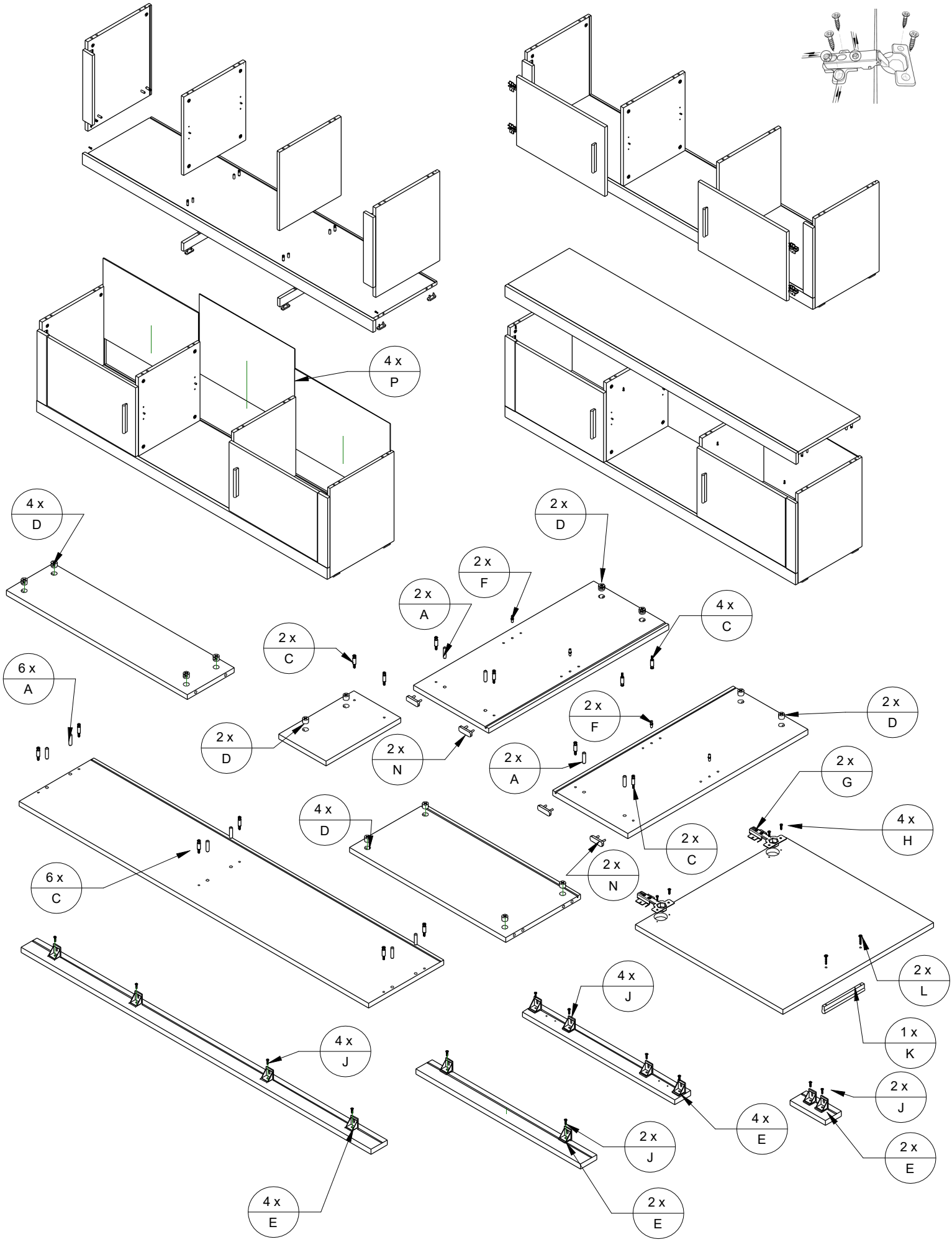
4 x
P
4 x
D
2 x
D
2 x
F
2 x
A
4 x
C
2 x
C
6 x
A
2 x
D
2 x
N
2 x
F
2 x
D
2 x
A
2 x
G
4 x
D
4 x
H
2 x
C
2 x
N
6 x
C
2 x
L
4 x
J
1 x
K
4 x
J
2 x
J
4 x
E
2 x
J
2 x
E
4 x
E
2 x
E

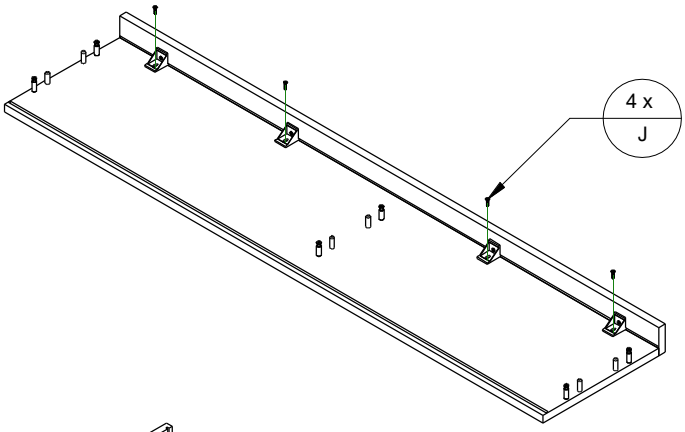
4 x
J

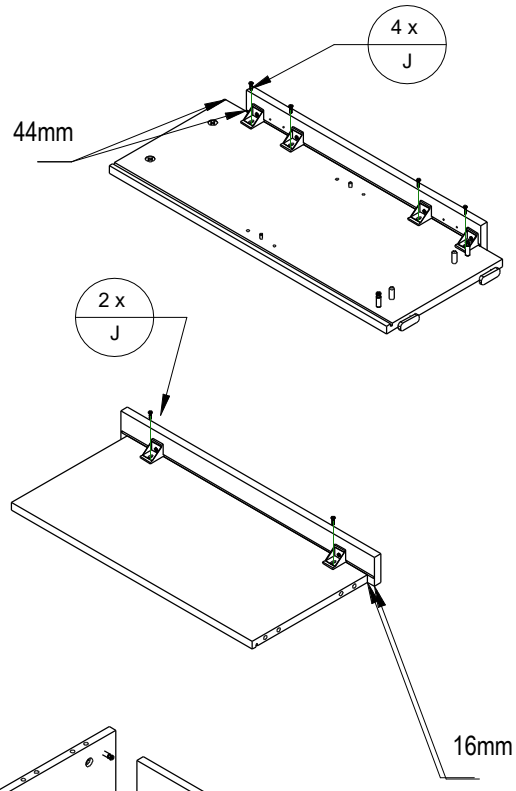
4 x
J
44mm
2 x
J
16mm

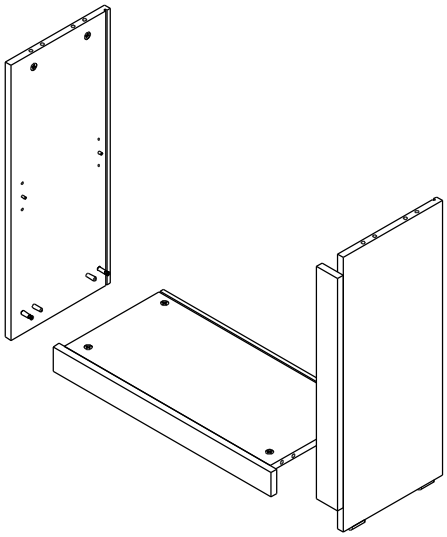

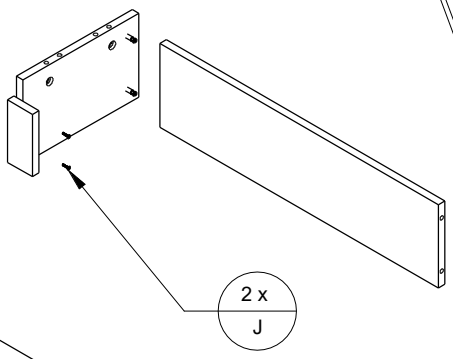
2 x
J

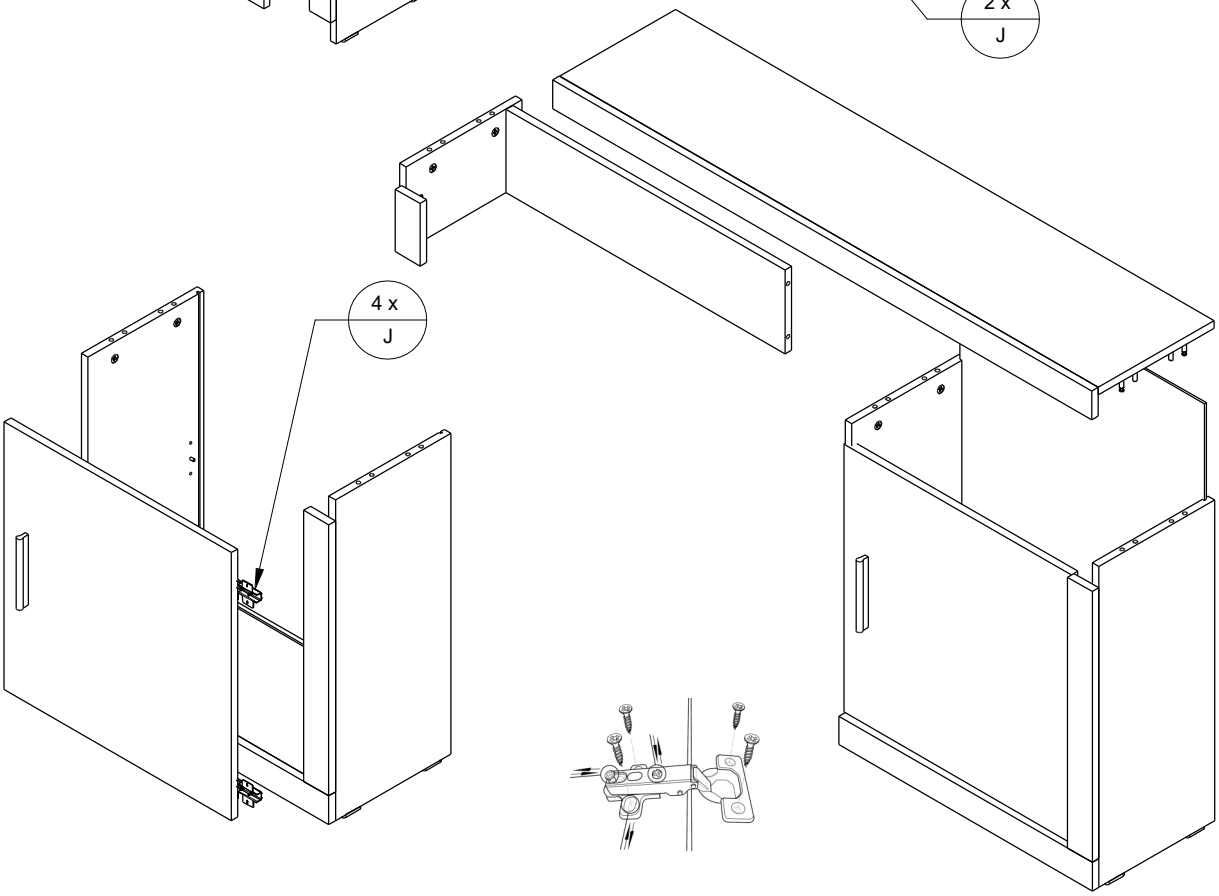
4 x
J